ETEK®

www.etek-electric.com

AC-DC Sensitive Residual Current Device (Type B & Type EV RCD)

EV Charging Stations

Photovoltaic (PV) Systems

UPS Systems

Industrial Welding Equipment

AC-DC Sensitive Residual Current Device (Type B & Type EV RCD)

Overview

A residual current device (RCD), also known as a residual current circuit breaker (RCCB), is a crucial electrical safety device. It detects imbalances in electrical flow and trips to provide protection against earth faults, reducing the risk of death or serious injury, and preventing the risk of fire caused by faulty wiring or other appliances.

In today's complex electrical environments, choosing the right RCDs is crucial for ensuring safety and compliance. ETEK Electric offers two specialized types of RCDs: Type B and Type EV.

Residual Current Circuit Breakers -RCCBs

Residual Current Circuit Breakers (RCCBs) are essential safety devices designed to detect and trip against electrical leakage currents, providing protection against electric shock from indirect contacts. They should be used in conjunction with an MCB or fuse to safeguard against potential thermal and dynamic stresses caused by overcurrents. Additionally, RCCBs serve as the main disconnecting switches upstream of any derived MCBs, such as those found in domestic consumer units.

Type B RCCBs can detect and protect against AC, pulsating DC, and smooth DC residual currents, offering comprehensive protection for modern electrical systems with complex load characteristics, such as Electric Vehicle (EV) Charging Stations, Photovoltaic (PV) Systems, Industrial Welding Equipment, Renewable Energy Applications, etc.

Type EV RCCB is a specialized protective device designed for use in electric vehicle (EV) charging systems only. It is specifically engineered to handle the unique electrical characteristics associated with EV charging, with integrated detection for AC, pulsating DC, and 6mA DC, such as home EV charging stations, public EV charging points, and workplace EV charging facilities.

RCCB

EKL1-63B

EKL6-100B

EKL6-63EV

Standard	IEC/EN 61008-1, IEC/EN62423	IEC/EN 61008-1, IEC/EN 62423	IEC/EN 61008-1, IEC 62955
Poles	1P+N, 3P+N	1P+N (36mm or 54mm), 3P+N	1P+N, 3P+N
Rated	16~63A	16~100A	16~63A
Residual Current Type	B	B	A
Sensitivity	30, 100, 300mA	30, 100, 300mA	30mA & 6mA DC
Breaking Capacity	10kA	10kA	10kA
Certificate	CE CB VDE	CE CB UK CA	CE CB UK CA

Residual Current circuit Breakers with Overcurrent protection - RCBOs

RCBO (Residual Current Circuit Breaker with Overcurrent Protection) is an electrical device that combines the functions of a Residual Current Circuit Breaker (RCCB) and a miniature circuit breaker (MCB). It provides protection against both earth leakage currents (which can cause electric shocks) and overcurrent situations (such as short circuits and overloads).

Type B RCBO is a specific type of RCBO designed to detect a broader range of residual current types. Unlike standard RCBOs, Type B RCBOs can detect smooth DC residual currents and mixed frequency currents, in addition to the AC and pulsating DC currents.

Type B RCBOs are particularly important in modern electrical installations with electronic devices and systems that can generate DC or mixed frequency fault currents. They ensure a higher level of safety in such scenarios by offering comprehensive protection.

RCBO

EKL5-63B

Standard	IEC61009-1, IEC62423
Poles	1P+N, 3P+N
Rated	6~63A
Residual Current Type	B
Tripping curve	B, C, D
Sensitivity	30, 100, 300mA
Breaking Capacity	10kA
Certificate	CE CB

Conclusion

Selecting the right ETEK Electric RCD is essential for ensuring electrical safety and compliance. Type B RCDs offer versatile protection for a wide range of modern electrical systems, while Type EV RCCBs provide specialized protection for EV charging applications. By carefully considering the application, required ratings, and specific protection needs, you can choose the most appropriate RCDs for your electrical installation, ensuring optimal safety and performance.

Technical Data

Standard	IEC/EN61008-1, IEC62423
Protection	Ground fault
Type of trip	Electro-magnetic
Type of protection (electric leakage)	B
No.of poles	2P(1P+N), 4P(3P+N)
Rated voltage (Ue)	1P+N: 230/240V~, 3P+N: 400/415V~
Rated currents (In)	16,20,25,32,40,63A
Rated sensitivity currents (I∆n)	30,100,300mA
Residual current off-time under (I∆n)	⩽ 0.1s
Rated residual making and breaking capacity(I∆m)	500A(In⩽50A), 10In(In>50A)
Rated frequency	50/60Hz
Rated breaking capacity	10,000A
SCPD fuse	10000
Rated impulse withstand voltage(1.2/50) (Uimp)	4,000V
Dielectric test voltage at Ind. Freq.for 1 min	2.5kV
Electrical life	2,000 Cycles
Mechanical life	4,000 Cycles
Contact position indicator	Yes
Protection degree	IP20
Ambient temperature	-25°C to +40°C, Max.95% humidity
Storage temperature	-25°C to +70°C
Terminal connection type	Cable/Pin-type busbar/U-type busbar
Max.terminal size for cable	25mm^2
Max.tightening torque	2.5N.m
Installation	Mounting on 35mm DIN rail
Connection	From top and bottom

Product Selection Form

Model	Rated Current	Poles	RCD Type	Residual Current	Code
EKL1-63B-1N1630	16A	1P+N	B	30mA	123028
EKL1-63B-1N2030	20A	1P+N	B	30mA	123020
EKL1-63B-1N2530	25A	1P+N	B	30mA	123001
EKL1-63B-1N3230	32A	1P+N	B	30mA	123060
EKL1-63B-1N4030	40A	1P+N	B	30mA	123002
EKL1-63B-1N6330	63A	1P+N	B	30mA	123003
EKL1-63B-1N20100	20A	1P+N	B	100mA	123021
EKL1-63B-1N25100	25A	1P+N	B	100mA	123004
EKL1-63B-1N32100	32A	1P+N	B	100mA	123061
EKL1-63B-1N40100	40A	1P+N	B	100mA	123005
EKL1-63B-1N63100	63A	1P+N	B	100mA	123006
EKL1-63B-1N20300	20A	1P+N	B	300mA	123022
EKL1-63B-1N25300	25A	1P+N	B	300mA	123007
EKL1-63B-1N32300	32A	1P+N	B	300mA	123062
EKL1-63B-1N40300	40A	1P+N	B	300mA	123008
EKL1-63B-1N63300	63A	1P+N	B	300mA	123009
EKL1-63B-3N1630	16A	3P+N	B	30mA	123027
EKL1-63B-3N2030	20A	3P+N	B	30mA	123023
EKL1-63B-3N2530	25A	3P+N	B	30mA	123010
EKL1-63B-3N3230	32A	3P+N	B	30mA	123019
EKL1-63B-3N4030	40A	3P+N	B	30mA	123011
EKL1-63B-3N6330	63A	3P+N	B	30mA	123012
EKL1-63B-3N16100	20A	3P+N	B	100mA	123024
EKL1-63B-3N25100	25A	3P+N	B	100mA	123013
EKL1-63B-3N32100	32A	3P+N	B	100mA	123064
EKL1-63B-3N40100	40A	3P+N	B	100mA	123014
EKL1-63B-3N63100	63A	3P+N	B	100mA	123015
EKL1-63B-3N16300	20A	3P+N	B	300mA	123025
EKL1-63B-3N25300	25A	3P+N	B	300mA	123016
EKL1-63B-3N32300	32A	3P+N	B	300mA	123065
EKL1-63B-3N40300	40A	3P+N	B	300mA	123017
EKL1-63B-3N63300	63A	3P+N	B	300mA	123018

Life

In	Operating cycles		Operating frequency (operations/h)
	On-load operating cycles	Off-load operating cycles	
16,20,25	2000	2000	240
32,40,63	2000	1000	120

Breaking Time of Residual Current

Max. breaking time					
In(A)	IΔn(A)	IΔn	2IΔn	5IΔn	5,10,20,50,100,200,500A
16,20,25,32,40,63	0.03, 0.1, 0.3	0.1s	0.08s	0.04s	0.04s

Wiring The suitable conductors should be used for connection,see table below for relative parameters.

Rated current In (A)	Cross section area s (mm^2)	Tightening torque (N.m)
16	2.5	2.5
20	2.5	2.5
25	4	2.5
32	6	2.5
40	10	2.5
63	16	2.5

RCD Type

Type	Description
B	Tripping is ensured for sinusoidal AC residual currents pulsed DC residual currents, alternating residual sinusoidal currents up to 1000Hz, pulsating direct residual currents and for smooth direct residual currents, whether applied suddenly or increasing slowly.

Tripping Sensitivity

- 30mA: Additional protection against direct contact.
- 100mA: Co-ordinated with the earth system according to the formula IΔn < 50/R, to provide protection against indirect contacts.
- 300mA: Protection against indirect contacts, as well as fire hazard.

Circuit Diagram

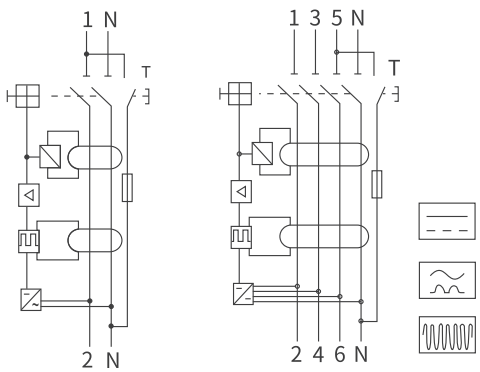

1P+N 3P+N

Dimension (mm)

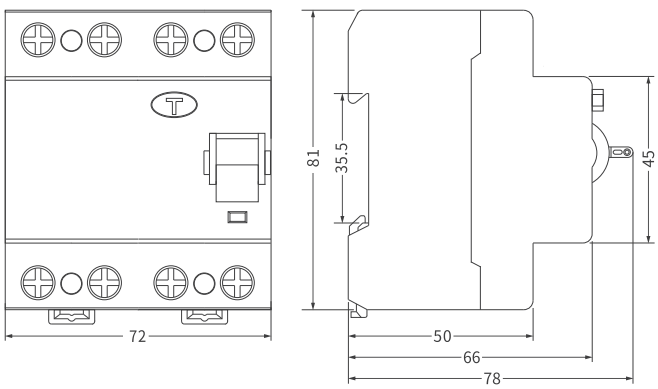

Technical Data

Standard	IEC61008-1, IEC62423
Protection	Ground fault
Type of trip	Electro-magnetic
Type of protection (electric leakage)	B
No.of poles	2P(1P+N), 4P(3P+N), N Pole on left
Insulation voltage (Ui)	500V
Rated voltage (Ue)	2P(1P+N):110/230/240V~, 4P(3P+N):240/400/415V~
Rated currents (In)	16,25,40,63,80,100A
Rated sensitivity currents (IΔn)	30,100,300mA
Residual current off-time under (IΔn)	⩽ 0.1s
Rated residual making and breaking capacity (IΔm)	500A(In⩽50A), 10In(In>50A)
Rated frequency	50/60Hz
Rated breaking capacity	10,000A
SCPD fuse	10000
Rated impulse withstand voltage(1.2/50) (Uimp)	4,000V
Dielectric test voltage at Ind. Freq.for 1 min	2.5kV
Electrical life	2,000 Cycles
Mechanical life	4,000 Cycles
Contact position indicator	Yes
Ground fault indicator	Yes
Protection degree	IP20
Ambient temperature	-25°C to +40°C, Max.95% humidity
Storage temperature	-25°C to +70°C
Terminal connection type	Cable/Pin-type busbar/Fork-type busbar
Max.terminal size for cable	35mm2
Max.tightening torque	2.5N.m
Installation	Mounting on 35mm DIN rail
Connection	From top and bottom

Product Selection Form

Model	Rated Current	Poles	RCD Class	Residual Current	Code
EKL6-100B(S)-1N1630	16A	1P+N(36mm)	B	30mA	125227
EKL6-100B(S)-1N2530	25A	1P+N(36mm)	B	30mA	125228
EKL6-100B(S)-1N3230	32A	1P+N(36mm)	B	30mA	125229
EKL6-100B(S)-1N4030	40A	1P+N(36mm)	B	30mA	125230
EKL6-100B(S)-1N6330	63A	1P+N(36mm)	B	30mA	125231
EKL6-100B(S)-1N8030	80A	1P+N(36mm)	B	30mA	125232
EKL6-100B(S)-1N10030	100A	1P+N(36mm)	B	30mA	125233
EKL6-100B(S)-1N16100	16A	1P+N(36mm)	B	100mA	125234
EKL6-100B(S)-1N25100	25A	1P+N(36mm)	B	100mA	125235
EKL6-100B(S)-1N32100	32A	1P+N(36mm)	B	100mA	125236
EKL6-100B(S)-1N40100	40A	1P+N(36mm)	B	100mA	125237
EKL6-100B(S)-1N63100	63A	1P+N(36mm)	B	100mA	125238
EKL6-100B(S)-1N80100	80A	1P+N(36mm)	B	100mA	125239
EKL6-100B(S)-1N100100	100A	1P+N(36mm)	B	100mA	125240
EKL6-100B(S)-1N16300	16A	1P+N(36mm)	B	300mA	125241
EKL6-100B(S)-1N25300	25A	1P+N(36mm)	B	300mA	125242
EKL6-100B(S)-1N32300	32A	1P+N(36mm)	B	300mA	125243
EKL6-100B(S)-1N40300	40A	1P+N(36mm)	B	300mA	125244
EKL6-100B(S)-1N63300	63A	1P+N(36mm)	B	300mA	125245
EKL6-100B(S)-1N80300	80A	1P+N(36mm)	B	300mA	125246
EKL6-100B(S)-1N100300	100A	1P+N(36mm)	B	300mA	125247
EKL6-100B-1N1630	16A	1P+N(54mm)	B	30mA	125401
EKL6-100B-1N2530	25A	1P+N(54mm)	B	30mA	125402
EKL6-100B-1N3230	32A	1P+N(54mm)	B	30mA	125403
EKL6-100B-1N4030	40A	1P+N(54mm)	B	30mA	125404
EKL6-100B-1N6330	63A	1P+N(54mm)	B	30mA	125405
EKL6-100B-1N8030	80A	1P+N(54mm)	B	30mA	125406
EKL6-100B-1N10030	100A	1P+N(54mm)	B	30mA	125407
EKL6-100B-1N16100	16A	1P+N(54mm)	B	100mA	125415
EKL6-100B-1N25100	25A	1P+N(54mm)	B	100mA	125416
EKL6-100B-1N32100	32A	1P+N(54mm)	B	100mA	125417
EKL6-100B-1N40100	40A	1P+N(54mm)	B	100mA	125418
EKL6-100B-1N63100	63A	1P+N(54mm)	B	100mA	125419
EKL6-100B-1N80100	80A	1P+N(54mm)	B	100mA	125420
EKL6-100B-1N100100	100A	1P+N(54mm)	B	100mA	125421
EKL6-100B-1N16300	16A	1P+N(54mm)	B	300mA	125429
EKL6-100B-1N25300	25A	1P+N(54mm)	B	300mA	125430
EKL6-100B-1N32300	32A	1P+N(54mm)	B	300mA	125431
EKL6-100B-1N40300	40A	1P+N(54mm)	B	300mA	125432
EKL6-100B-1N63300	63A	1P+N(54mm)	B	300mA	125433
EKL6-100B-1N80300	80A	1P+N(54mm)	B	300mA	125434
EKL6-100B-1N100300	100A	1P+N(54mm)	B	300mA	125435

Model	Rated Current	Poles	RCD Class	Residual Current	Code
EKL6-100B-3N1630	16A	3P+N	B	30mA	125408
EKL6-100B-3N2530	25A	3P+N	B	30mA	125409
EKL6-100B-3N3230	32A	3P+N	B	30mA	125410
EKL6-100B-3N4030	40A	3P+N	B	30mA	125411
EKL6-100B-3N6330	63A	3P+N	B	30mA	125412
EKL6-100B-3N8030	80A	3P+N	B	30mA	125413
EKL6-100B-3N10030	100A	3P+N	B	30mA	125414
EKL6-100B-3N16100	16A	3P+N	B	100mA	125422
EKL6-100B-3N25100	25A	3P+N	B	100mA	125423
EKL6-100B-3N32100	32A	3P+N	B	100mA	125424
EKL6-100B-3N40100	40A	3P+N	B	100mA	125425
EKL6-100B-3N63100	63A	3P+N	B	100mA	125426
EKL6-100B-3N80100	80A	3P+N	B	100mA	125427
EKL6-100B-3N100100	100A	3P+N	B	100mA	125428
EKL6-100B-3N16300	16A	3P+N	B	300mA	125436
EKL6-100B-3N25300	25A	3P+N	B	300mA	125437
EKL6-100B-3N32300	32A	3P+N	B	300mA	125438
EKL6-100B-3N40300	40A	3P+N	B	300mA	125439
EKL6-100B-3N63300	63A	3P+N	B	300mA	125440
EKL6-100B-3N80300	80A	3P+N	B	300mA	125441
EKL6-100B-3N100300	100A	3P+N	B	300mA	125442

Life

In	Operating cycles		Operating frequency (operations/h)
	On-load operating cycles	Off-load operating cycles	
16,25	2000	2000	240
40,63,80,100	2000	1000	120

Breaking Time of Residual Current

Max. breaking time					
In(A)	IΔn(A)	IΔn	2IΔn	5IΔn	5,10,20,50,100,200,500A
16,25,40,63,80,100	0.03, 0.1, 0.3	0.1s	0.08s	0.04s	0.04s

Wiring The suitable conductors should be used for connection,see table below for relative parameters.

Rated current In (A)	Cross section area s (mm^2)	Tightening torque (N.m)
16	2.5	2.5
25	4	2.5
40	10	2.5
63	16	2.5
80	25	2.5
100	35	2.5

RCD Type

Type	Description
B	Tripping is ensured for sinusoidal AC residual currents pulsed DC residual currents, alternating residual sinusoidal currents up to 1000Hz, pulsating direct residual currents and for smooth direct residual currents, whether applied suddenly or increasing slowly.

Tripping Sensitivity

- 30mA: Additional protection against direct contact.
- 100mA: Co-ordinated with the earth system according to the formula $I_{\Delta n} < 50/R$, to provide protection against indirect contacts.
- 300mA: Protection against indirect contacts, as well as fire hazard.

Circuit Diagram

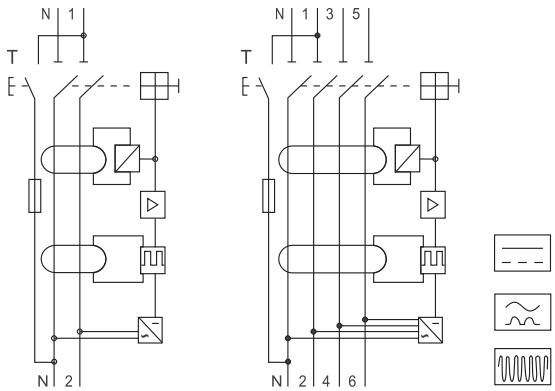

1P+N 3P+N

Dimension (mm)

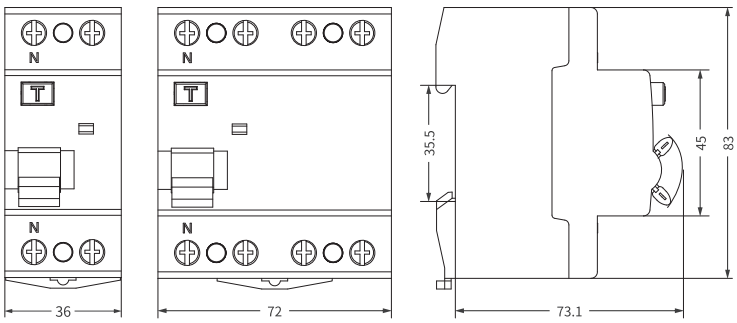

Technical Data

Standard	IEC61008-1, IEC62955
Protection	Ground fault
Type of trip	Electro-magnetic
Type of protection (electric leakage)	A
No.of poles	2P(1P+N), 4P(3P+N) , N Pole on left
Insulation voltage (Ui)	500V
Rated voltage (Ue)	2P: 240V~, 4P: 415V~
Rated currents (In)	16,25,32,40,63A
Rated sensitivity currents (I∆n)	30mA
Rated residual operating current (I∆dc)	6mA
Residual current off-time under (I∆n)	⩽ 0.1s
Rated residual making and breaking capacity (I∆m)	500A(In⩽50A), 10In(In>50A)
Rated frequency	50/60Hz
Rated breaking capacity	10,000A
SCPD fuse	10000
Rated impulse withstand voltage(1.2/50) (Uimp)	4,000V
Dielectric test voltage at Ind. Freq.for 1 min	2.5kV
Electrical life	2,000 Cycles
Mechanical life	4,000 Cycles
Contact position indicator	Yes
Ground fault indicator	Yes
Protection degree	IP20
Ambient temperature	-25°C to +55°C, Max.95% humidity
Storage temperature	-25°C to +70°C
Terminal connection type	Cable/Pin-type busbar/Fork-type busbar
Max.terminal size for cable	35mm2
Max.tightening torque	2.5N.m
Installation	Mounting on 35mm DIN rail
Connection	From top and bottom

Product Selection Form

Model	Rated Current	Poles	RCD Type	Residual Current	Code
EKL6-63EV-1N2530AD6	25A	1P+N	A	30mA+6mA DC	125452
EKL6-63EV-1N3230AD6	32A	1P+N	A	30mA+6mA DC	125225
EKL6-63EV-1N4030AD6	40A	1P+N	A	30mA+6mA DC	125453
EKL6-63EV-1N6330AD6	63A	1P+N	A	30mA+6mA DC	125454
EKL6-63EV-3N2530AD6	25A	3P+N	A	30mA+6mA DC	125455
EKL6-63EV-3N3230AD6	32A	3P+N	A	30mA+6mA DC	125226
EKL6-63EV-3N4030AD6	40A	3P+N	A	30mA+6mA DC	125456
EKL6-63EV-3N6330AD6	63A	3P+N	A	30mA+6mA DC	125457

Life

In	Operating cycles		Operating frequency (operations/h)
	On-load operating cycles	Off-load operating cycles	
25	2000	2000	240
32,40,63	2000	1000	120

Breaking Time of Residual Current

Max. breaking time					
In(A)	IΔn(A)	IΔn	2IΔn	5IΔn	5,10,20,50,100,200,500A
25,32,40,63	0.03, 0.1, 0.3	0.1s	0.08s	0.04s	0.04s

Wiring The suitable conductors should be used for connection,see table below for relative parameters.

Rated current In (A)	Cross section area s (mm^2)	Tightening torque (N.m)
25	4	2.5
32	6	2.5
40	10	2.5
63	16	2.5

RCD Type

Type	Description
A	Tripping is ensured for sinusoidal AC residual currents and for pulsed DC residual currents, whether applied suddenly or increasing slowly.

Tripping Sensitivity

- 30mA: Additional protection against direct contact.
- 6mA DC: Designed to detect DC leakage currents of 6 mA or greater. When such a leakage current is detected, the protection device will interrupt the circuit to prevent potential hazards such as electric shock or fire.

Circuit Diagram

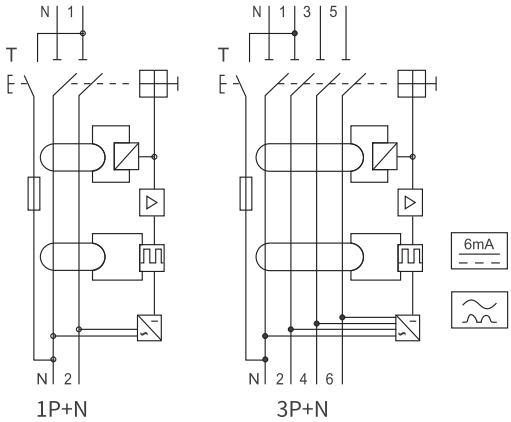

Dimension (mm)

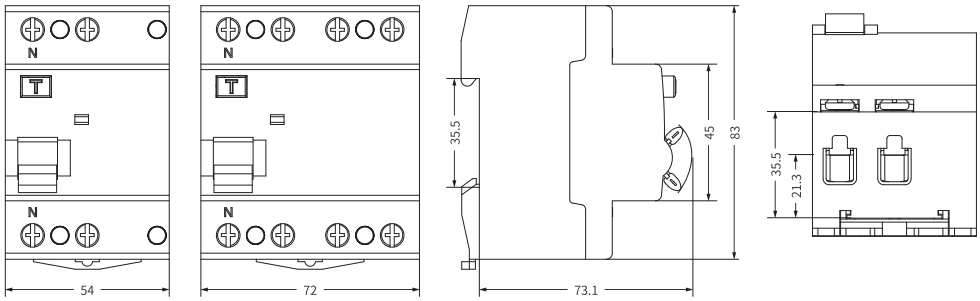

Technical Data

Standard	IEC/EN61009-1 ,IEC/EN62423
Protection	Ground fault, Overcurrent and short circuit, Over-voltage(selectable)
Type of trip	Ground fault : Electronic
	Overload and short circuit :Thermo-magnetic
Type of protection (electric leakage)	B
No.of poles	1P+N 3module , 3P+N 5module, N line with disconnected
Rated voltage (Ue)	1P+N:230/240V~,3P+N:400/415V~
Rated currents (In)	6,10,16,20,25,32,40,50,63A
Rated sensitivity currents (I∆n)	30,100,300mA
Residual current off-time under (I∆n)	⩽ 0.1s
Rated residual making and breaking capacity (I∆m)	500A(In⩽50A), 10In(In>50A)
Rated frequency	50/60Hz
Rated breaking capacity	6,000A, 10,000A
Energy Limiting Class	3
Rated impulse withstand voltage(1.2/50) (Uimp)	4,000V
Dielectric test voltage at Ind. Freq.for 1 min	2kV
Thermal release characteristic	(1.13-1.45) x In
Magnetic release characteristic	B:(3-5) x In, C:(5-10) x In, D:(10-20) x In
Electrical life	4,000 Cycles
Mechanical life	10,000 Cycles
Contact position indicator	Yes
Ground fault indicator	Yes
Protection degree	IP20
Ambient temperature	-25°C to +55°C, Max.95% humidity
Storage temperature	-25°C to +70°C
Terminal connection type	Cable/Pin-type busbar/Fork-type busbar
Max.terminal size for cable	25mm^2
Max.tightening torque	2.5N.m
Installation	Mounting on 35mm DIN rail
Connection	From top

Product Selection Form

Model	Rated Current	Poles	Trip Curve	RCD Type	Residual Current	Code
EKL5-63B-1NB0630	6A	1P+N	B	B	30mA	132401
EKL5-63B-1NB1030	10A	1P+N	B	B	30mA	132402
EKL5-63B-1NB1630	16A	1P+N	B	B	30mA	132403
EKL5-63B-1NB2030	20A	1P+N	B	B	30mA	132404
EKL5-63B-1NB2530	25A	1P+N	B	B	30mA	132405
EKL5-63B-1NB3230	32A	1P+N	B	B	30mA	132406
EKL5-63B-1NB4030	40A	1P+N	B	B	30mA	132407
EKL5-63B-1NB5030	50A	1P+N	B	B	30mA	132408
EKL5-63B-1NB6330	63A	1P+N	B	B	30mA	132409
EKL5-63B-1NB06100	6A	1P+N	B	B	100mA	132410
EKL5-63B-1NB10100	10A	1P+N	B	B	100mA	132411
EKL5-63B-1NB16100	16A	1P+N	B	B	100mA	132412
EKL5-63B-1NB20100	20A	1P+N	B	B	100mA	132413
EKL5-63B-1NB25100	25A	1P+N	B	B	100mA	132414
EKL5-63B-1NB32100	32A	1P+N	B	B	100mA	132415
EKL5-63B-1NB40100	40A	1P+N	B	B	100mA	132416
EKL5-63B-1NB50100	50A	1P+N	B	B	100mA	132417
EKL5-63B-1NB63100	63A	1P+N	B	B	100mA	132418
EKL5-63B-1NB06300	6A	1P+N	B	B	300mA	132419
EKL5-63B-1NB10300	10A	1P+N	B	B	300mA	132420
EKL5-63B-1NB16300	16A	1P+N	B	B	300mA	132421
EKL5-63B-1NB20300	20A	1P+N	B	B	300mA	132422
EKL5-63B-1NB25300	25A	1P+N	B	B	300mA	132423
EKL5-63B-1NB32300	32A	1P+N	B	B	300mA	132424
EKL5-63B-1NB40300	40A	1P+N	B	B	300mA	132425
EKL5-63B-1NB50300	50A	1P+N	B	B	300mA	132426
EKL5-63B-1NB63300	63A	1P+N	B	B	300mA	132427
EKL5-63B-1NC0630	6A	1P+N	C	B	30mA	132428
EKL5-63B-1NC1030	10A	1P+N	C	B	30mA	132429
EKL5-63B-1NC1630	16A	1P+N	C	B	30mA	132430
EKL5-63B-1NC2030	20A	1P+N	C	B	30mA	132431
EKL5-63B-1NC2530	25A	1P+N	C	B	30mA	132432
EKL5-63B-1NC3230	32A	1P+N	C	B	30mA	132433
EKL5-63B-1NC4030	40A	1P+N	C	B	30mA	132434
EKL5-63B-1NC5030	50A	1P+N	C	B	30mA	132435
EKL5-63B-1NC6330	63A	1P+N	C	B	30mA	132436
EKL5-63B-1NC06100	6A	1P+N	C	B	100mA	132437
EKL5-63B-1NC10100	10A	1P+N	C	B	100mA	132438
EKL5-63B-1NC16100	16A	1P+N	C	B	100mA	132439
EKL5-63B-1NC20100	20A	1P+N	C	B	100mA	132440

Model	Rated Current	Poles	Trip Curve	RCD Type	Residual Current	Code
EKL5-63B-1NC25100	25A	1P+N	C	B	100mA	132441
EKL5-63B-1NC32100	32A	1P+N	C	B	100mA	132442
EKL5-63B-1NC40100	40A	1P+N	C	B	100mA	132443
EKL5-63B-1NC50100	50A	1P+N	C	B	100mA	132444
EKL5-63B-1NC63100	63A	1P+N	C	B	100mA	132445
EKL5-63B-1NC06300	6A	1P+N	C	B	300mA	132446
EKL5-63B-1NC10300	10A	1P+N	C	B	300mA	132447
EKL5-63B-1NC16300	16A	1P+N	C	B	300mA	132448
EKL5-63B-1NC20300	20A	1P+N	C	B	300mA	132449
EKL5-63B-1NC25300	25A	1P+N	C	B	300mA	132450
EKL5-63B-1NC32300	32A	1P+N	C	B	300mA	132451
EKL5-63B-1NC40300	40A	1P+N	C	B	300mA	132452
EKL5-63B-1NC50300	50A	1P+N	C	B	300mA	132453
EKL5-63B-1NC63300	63A	1P+N	C	B	300mA	132454
EKL5-63B-1ND0630	6A	1P+N	D	B	30mA	133360
EKL5-63B-1ND1030	10A	1P+N	D	B	30mA	133361
EKL5-63B-1ND1630	16A	1P+N	D	B	30mA	133362
EKL5-63B-1ND2030	20A	1P+N	D	B	30mA	133363
EKL5-63B-1ND2530	25A	1P+N	D	B	30mA	133364
EKL5-63B-1ND3230	32A	1P+N	D	B	30mA	133365
EKL5-63B-1ND4030	40A	1P+N	D	B	30mA	133366
EKL5-63B-1ND5030	50A	1P+N	D	B	30mA	133367
EKL5-63B-1ND6330	63A	1P+N	D	B	30mA	133368
EKL5-63B-1ND06100	6A	1P+N	D	B	100mA	133369
EKL5-63B-1ND10100	10A	1P+N	D	B	100mA	133370
EKL5-63B-1ND16100	16A	1P+N	D	B	100mA	133371
EKL5-63B-1ND20100	20A	1P+N	D	B	100mA	133372
EKL5-63B-1ND25100	25A	1P+N	D	B	100mA	133373
EKL5-63B-1ND32100	32A	1P+N	D	B	100mA	133374
EKL5-63B-1ND40100	40A	1P+N	D	B	100mA	133375
EKL5-63B-1ND50100	50A	1P+N	D	B	100mA	133376
EKL5-63B-1ND63100	63A	1P+N	D	B	100mA	133377
EKL5-63B-1ND06300	6A	1P+N	D	B	300mA	133378
EKL5-63B-1ND10300	10A	1P+N	D	B	300mA	133379
EKL5-63B-1ND16300	16A	1P+N	D	B	300mA	133380
EKL5-63B-1ND20300	20A	1P+N	D	B	300mA	133381
EKL5-63B-1ND25300	25A	1P+N	D	B	300mA	133382
EKL5-63B-1ND32300	32A	1P+N	D	B	300mA	133383
EKL5-63B-1ND40300	40A	1P+N	D	B	300mA	133384
EKL5-63B-1ND50300	50A	1P+N	D	B	300mA	133385
EKL5-63B-1ND63300	63A	1P+N	D	B	300mA	133386

Model	Rated Current	Poles	Trip Curve	RCD Type	Residual Current	Code
EKL5-63B-3NB0630	6A	3P+N	B	B	30mA	132455
EKL5-63B-3NB1030	10A	3P+N	B	B	30mA	132456
EKL5-63B-3NB1630	16A	3P+N	B	B	30mA	132457
EKL5-63B-3NB2030	20A	3P+N	B	B	30mA	132458
EKL5-63B-3NB2530	25A	3P+N	B	B	30mA	132459
EKL5-63B-3NB3230	32A	3P+N	B	B	30mA	132460
EKL5-63B-3NB4030	40A	3P+N	B	B	30mA	132461
EKL5-63B-3NB5030	50A	3P+N	B	B	30mA	132462
EKL5-63B-3NB6330	63A	3P+N	B	B	30mA	132463
EKL5-63B-3NB06100	6A	3P+N	B	B	100mA	132464
EKL5-63B-3NB10100	10A	3P+N	B	B	100mA	132465
EKL5-63B-3NB16100	16A	3P+N	B	B	100mA	132466
EKL5-63B-3NB20100	20A	3P+N	B	B	100mA	132467
EKL5-63B-3NB25100	25A	3P+N	B	B	100mA	132468
EKL5-63B-3NB32100	32A	3P+N	B	B	100mA	132469
EKL5-63B-3NB40100	40A	3P+N	B	B	100mA	132470
EKL5-63B-3NB50100	50A	3P+N	B	B	100mA	132471
EKL5-63B-3NB63100	63A	3P+N	B	B	100mA	132472
EKL5-63B-3NB06300	6A	3P+N	B	B	300mA	132473
EKL5-63B-3NB10300	10A	3P+N	B	B	300mA	132474
EKL5-63B-3NB16300	16A	3P+N	B	B	300mA	132475
EKL5-63B-3NB20300	20A	3P+N	B	B	300mA	132476
EKL5-63B-3NB25300	25A	3P+N	B	B	300mA	132477
EKL5-63B-3NB32300	32A	3P+N	B	B	300mA	132478
EKL5-63B-3NB40300	40A	3P+N	B	B	300mA	132479
EKL5-63B-3NB50300	50A	3P+N	B	B	300mA	132480
EKL5-63B-3NB63300	63A	3P+N	B	B	300mA	132481
EKL5-63B-3NC0630	6A	3P+N	C	B	30mA	132482
EKL5-63B-3NC1030	10A	3P+N	C	B	30mA	132483
EKL5-63B-3NC1630	16A	3P+N	C	B	30mA	132484
EKL5-63B-3NC2030	20A	3P+N	C	B	30mA	132485
EKL5-63B-3NC2530	25A	3P+N	C	B	30mA	132486
EKL5-63B-3NC3230	32A	3P+N	C	B	30mA	132487
EKL5-63B-3NC4030	40A	3P+N	C	B	30mA	132488
EKL5-63B-3NC5030	50A	3P+N	C	B	30mA	132489
EKL5-63B-3NC6330	63A	3P+N	C	B	30mA	132490
EKL5-63B-3NC06100	6A	3P+N	C	B	100mA	132491
EKL5-63B-3NC10100	10A	3P+N	C	B	100mA	132492
EKL5-63B-3NC16100	16A	3P+N	C	B	100mA	132493
EKL5-63B-3NC20100	20A	3P+N	C	B	100mA	132494

Model	Rated Current	Poles	Trip Curve	RCD Type	Residual Current	Code
EKL5-63B-3NC25100	25A	3P+N	C	B	100mA	132495
EKL5-63B-3NC32100	32A	3P+N	C	B	100mA	132496
EKL5-63B-3NC40100	40A	3P+N	C	B	100mA	132497
EKL5-63B-3NC50100	50A	3P+N	C	B	100mA	132498
EKL5-63B-3NC63100	63A	3P+N	C	B	100mA	132499
EKL5-63B-3NC06300	6A	3P+N	C	B	300mA	132500
EKL5-63B-3NC10300	10A	3P+N	C	B	300mA	132501
EKL5-63B-3NC16300	16A	3P+N	C	B	300mA	132502
EKL5-63B-3NC20300	20A	3P+N	C	B	300mA	132503
EKL5-63B-3NC25300	25A	3P+N	C	B	300mA	132504
EKL5-63B-3NC32300	32A	3P+N	C	B	300mA	132505
EKL5-63B-3NC40300	40A	3P+N	C	B	300mA	132506
EKL5-63B-3NC50300	50A	3P+N	C	B	300mA	132507
EKL5-63B-3NC63300	63A	3P+N	C	B	300mA	132508
EKL5-63B-3ND0630	6A	3P+N	D	B	30mA	133387
EKL5-63B-3ND1030	10A	3P+N	D	B	30mA	133388
EKL5-63B-3ND1630	16A	3P+N	D	B	30mA	133389
EKL5-63B-3ND2030	20A	3P+N	D	B	30mA	133390
EKL5-63B-3ND2530	25A	3P+N	D	B	30mA	133391
EKL5-63B-3ND3230	32A	3P+N	D	B	30mA	133392
EKL5-63B-3ND4030	40A	3P+N	D	B	30mA	133393
EKL5-63B-3ND5030	50A	3P+N	D	B	30mA	133394
EKL5-63B-3ND6330	63A	3P+N	D	B	30mA	133395
EKL5-63B-3ND06100	6A	3P+N	D	B	100mA	133396
EKL5-63B-3ND10100	10A	3P+N	D	B	100mA	133397
EKL5-63B-3ND16100	16A	3P+N	D	B	100mA	133398
EKL5-63B-3ND20100	20A	3P+N	D	B	100mA	133399
EKL5-63B-3ND25100	25A	3P+N	D	B	100mA	133400
EKL5-63B-3ND32100	32A	3P+N	D	B	100mA	133401
EKL5-63B-3ND40100	40A	3P+N	D	B	100mA	133402
EKL5-63B-3ND50100	50A	3P+N	D	B	100mA	133403
EKL5-63B-3ND63100	63A	3P+N	D	B	100mA	133404
EKL5-63B-3ND06300	6A	3P+N	D	B	300mA	133405
EKL5-63B-3ND10300	10A	3P+N	D	B	300mA	133406
EKL5-63B-3ND16300	16A	3P+N	D	B	300mA	133407
EKL5-63B-3ND20300	20A	3P+N	D	B	300mA	133408
EKL5-63B-3ND25300	25A	3P+N	D	B	300mA	133409
EKL5-63B-3ND32300	32A	3P+N	D	B	300mA	133410
EKL5-63B-3ND40300	40A	3P+N	D	B	300mA	133411
EKL5-63B-3ND50300	50A	3P+N	D	B	300mA	133412
EKL5-63B-3ND63300	63A	3P+N	D	B	300mA	133413

Tripping Characteristic

Curve	Rated current	Condition						
		Thermal release				Magnetic release		
		Non-tripping	Tripping	Non-tripping	Tripping time	Holding current	Tripping current	Tripping time
B	6-63A	1.13×In		≤1h		3×In		≥0.1
			1.45×In		<1h		5×In	<0.1
C	6-63A	1.13×In		≤1h		5×In		≥0.1
			1.45×In		<1h		10×In	<0.1
D	6-63A	1.13×In		≤1h		10×In		≥0.1
			1.45×In		<1h		20×In	<0.1

B curve

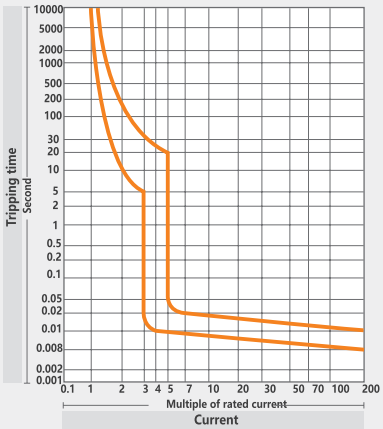

Universal use
- socket outlet, lighting device

C curve

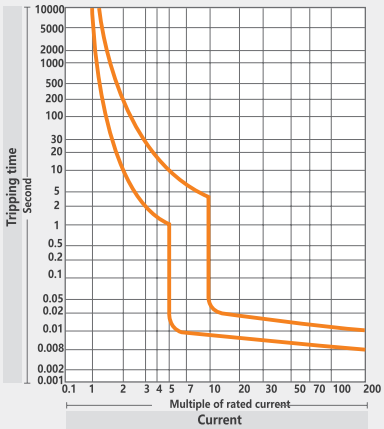

Resistive & inductive loads with low inruch current
- lamp, high starting current motor

D curve

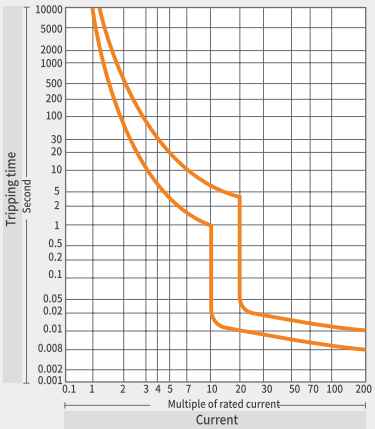

Loads with high inrush current
- transformer, solenoid valve, 2 pole motor

Temperature Derating Table

Rated current (A)	Correction factor for ambient temperature											
	-40°C	-30°C	-20°C	-10°C	0°C	10°C	20°C	30°C	40°C	50°C	60°C	70°C
6	8	7.7	7.5	7.2	6.9	6.6	6.3	6	5.7	5.3	4.9	4.5
10	13.3	12.9	12.5	12	11.5	11.1	10.5	10	9.4	8.8	8.2	7.5
16	21.3	20.7	20	19.2	18.5	17.7	16.9	16	15.1	14.1	13.1	11.9
20	26.7	25.8	24.9	24	23.1	22.1	21.1	20	18.9	17.6	16.3	14.9
25	33.3	32.3	31.2	30	28.9	27.6	26.4	25	23.6	22	20.4	18.6
32	42.7	41.3	39.9	38.5	37	35.4	33.7	32	30.2	28.2	26.1	23.9
40	53.3	51.6	49.9	48.1	46.2	44.2	42.2	40	37.7	35.3	32.7	29.8
50	66.7	64.5	62.4	60.1	57.7	55.3	52.7	50	47.1	44.1	40.8	37.3
63	84	81.3	78.6	75.7	72.7	69.6	66.4	63	59.4	55.6	51.4	47

RCD Type

Type	Description
B	Tripping is ensured for sinusoidal AC residual currents pulsed DC residual currents, alternating residual sinusoidal currents up to 1000Hz, pulsating direct residual currents and for smooth direct residual currents, whether applied suddenly or increasing slowly.

Tripping Sensitivity

- 30mA: Additional protection against direct contact.
- 100mA: Co-ordinated with the earth system according to the formula $I_{\Delta n} < 50/R$, to provide protection against indirect contacts.
- 300mA: Protection against indirect contacts, as well as fire hazard.

Circuit Diagram

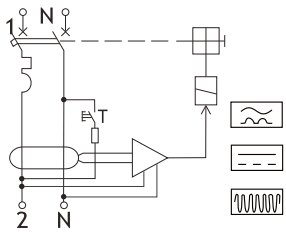

1P+N

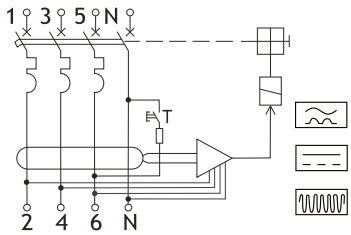

3P+N

Dimension (mm)

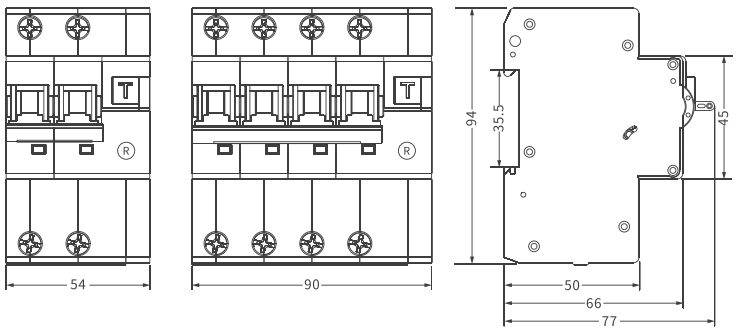

Certificate

EKL1-63B


ATTESTATION
of conformity with European Directives


CB TEST CERTIFICATE


VDE Prüf- und Zertifizierungsinstitut
ZEICHENGENEHMIGUNG
MARKS APPROVAL

EKL6-100B


CERTIFICATE
of Conformity
Low Voltage Directive 2014/35/EU


CB TEST CERTIFICATE


Zertifikat Certificate


CERTIFICATE
of Conformity
Electrical Equipment (Safety) Regulations 2016

EKL6-63EV


CERTIFICATE
of Conformity
Low Voltage Directive 2014/35/EU

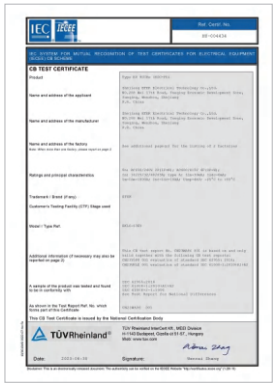
CB TEST CERTIFICATE


Zertifikat Certificate


CERTIFICATE
of Conformity
Electrical Equipment (Safety) Regulations 2016

EKL5-63B


Test Verification of Conformity
Verification Number: 2302010345HA-V1


CB TEST CERTIFICATE

The product data referred to in the company shall be subject to material object. Subject to change without notice. The company has the final right to interpret.

Green paper printing.

ETEK ELECTRIC

ZHEJIANG ETEK ELECTRICAL TECHNOLOGY CO.,LTD.

No.288 Wei 17th Road, Economic Development Zone, Yueqing City, Zhejiang China.
Tel: 0086-577-62718777 0086-577-62780116
Email: info@etek-china.com
Web: www.etek-china.com

ETEK ELECTRICAL WUHU CO.,LTD.

No.770 Wutun Fast Road, Anhui Xinwu Economic Development Zone, Wanzhi District,
Wuhu City, Anhui Province, P.R.China
Tel: 0086-553-8511789
Email: sales@etek-electric.com
Web: www.etek-electric.com